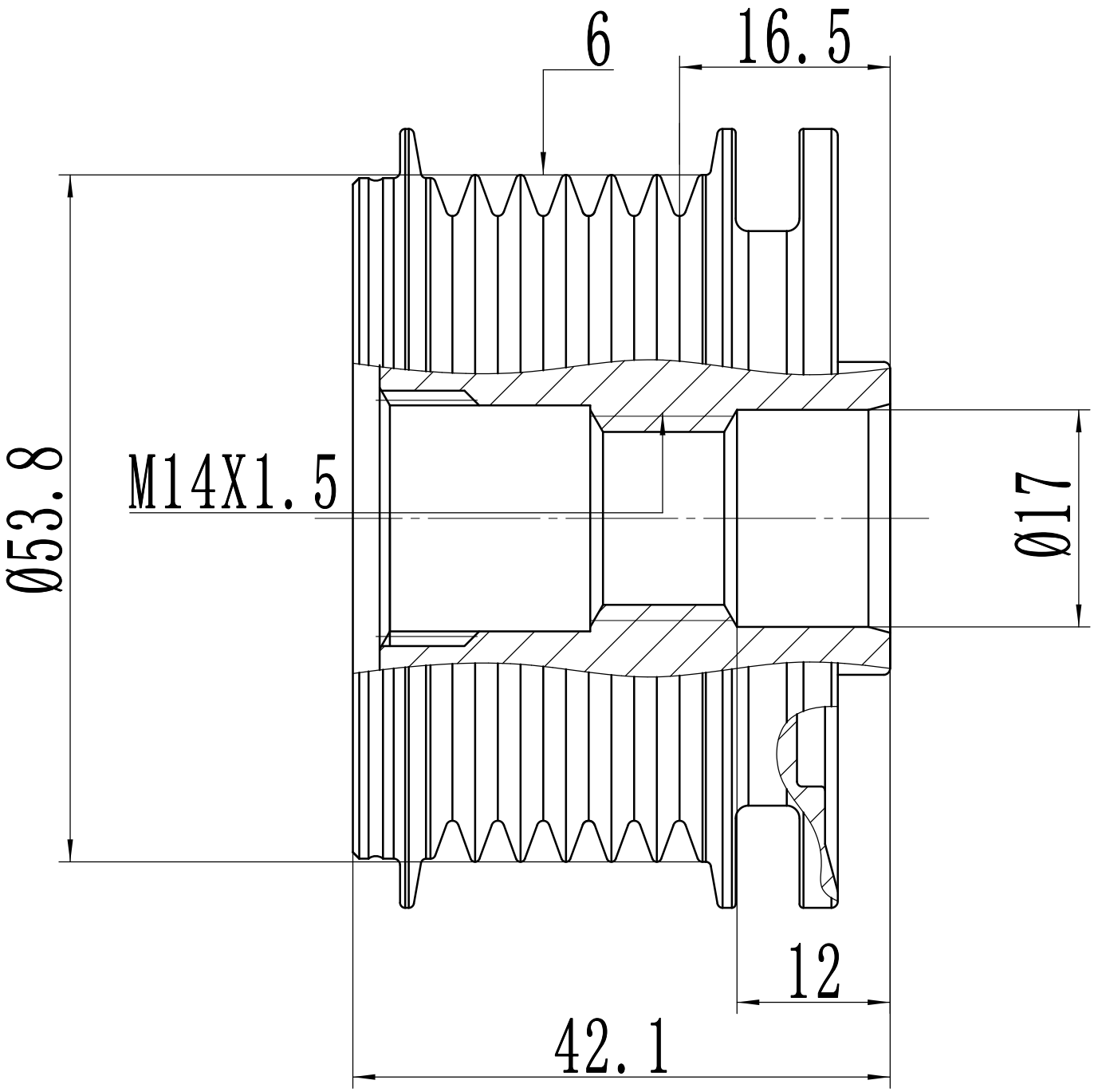
6
16.5
Ø53.8
M14X1.5
Ø17
12
42.1