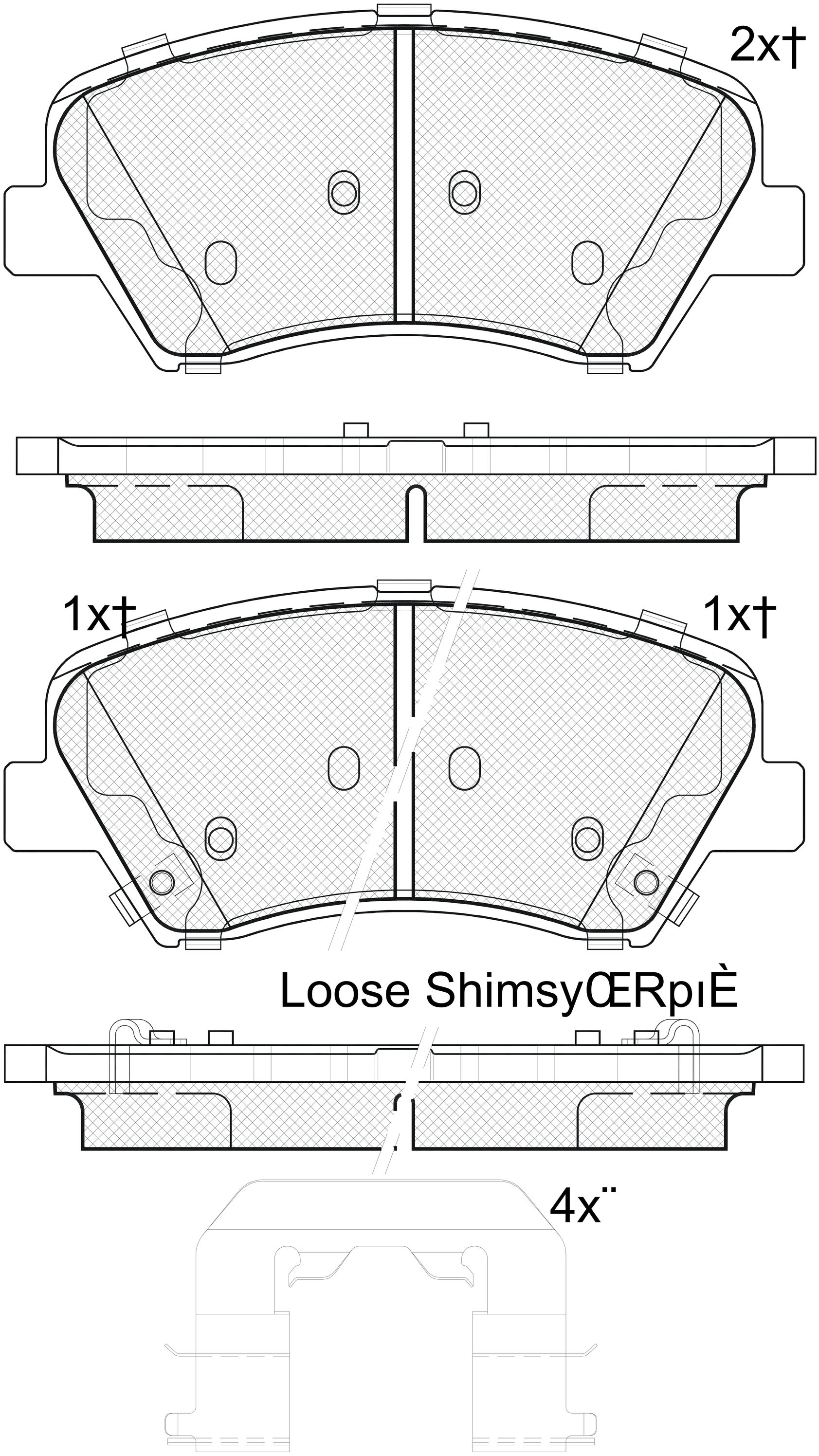

Loose ShimsyŒRpıÈ

1-Ref. 690303 E¨nŒ???0