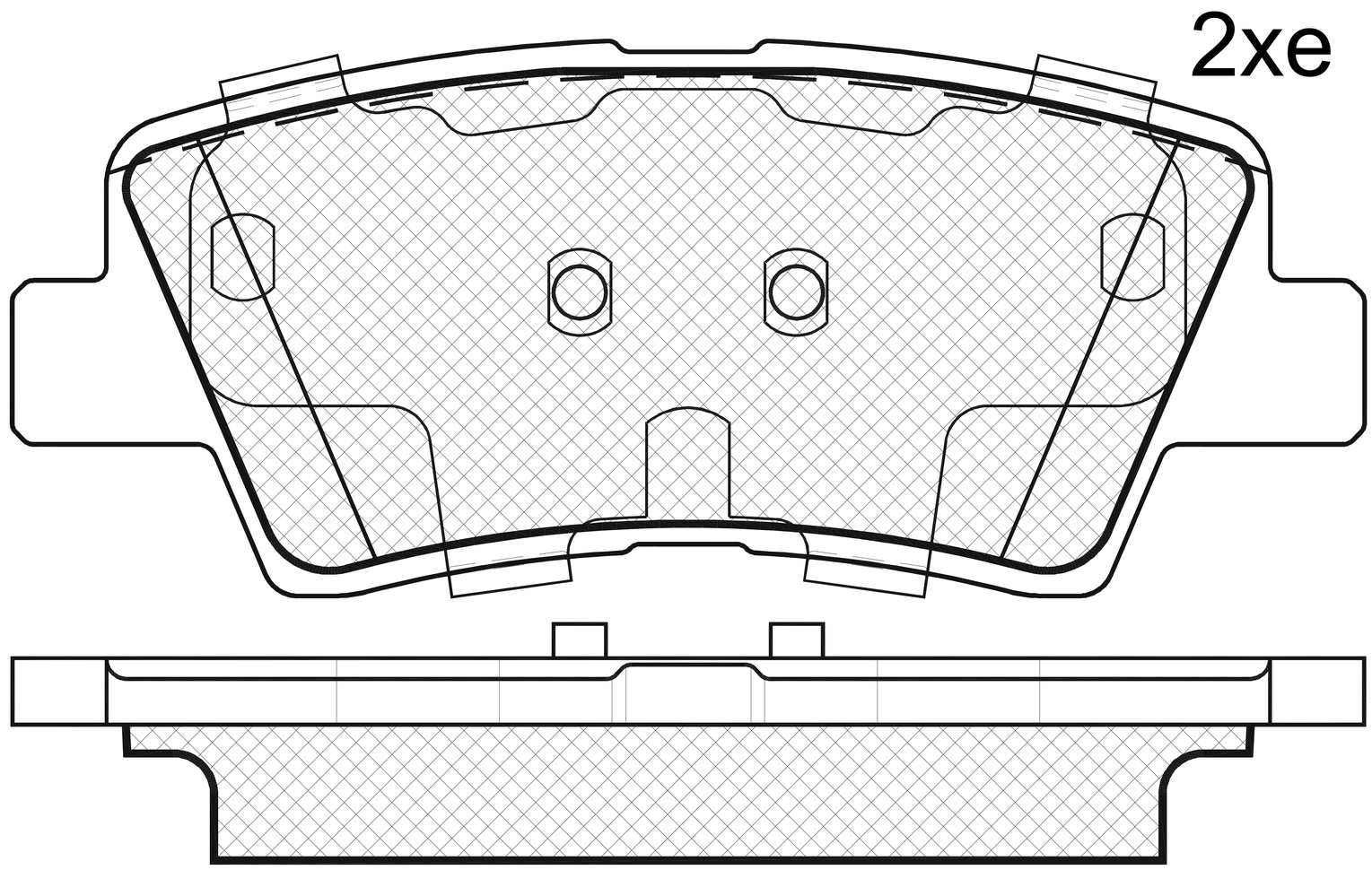

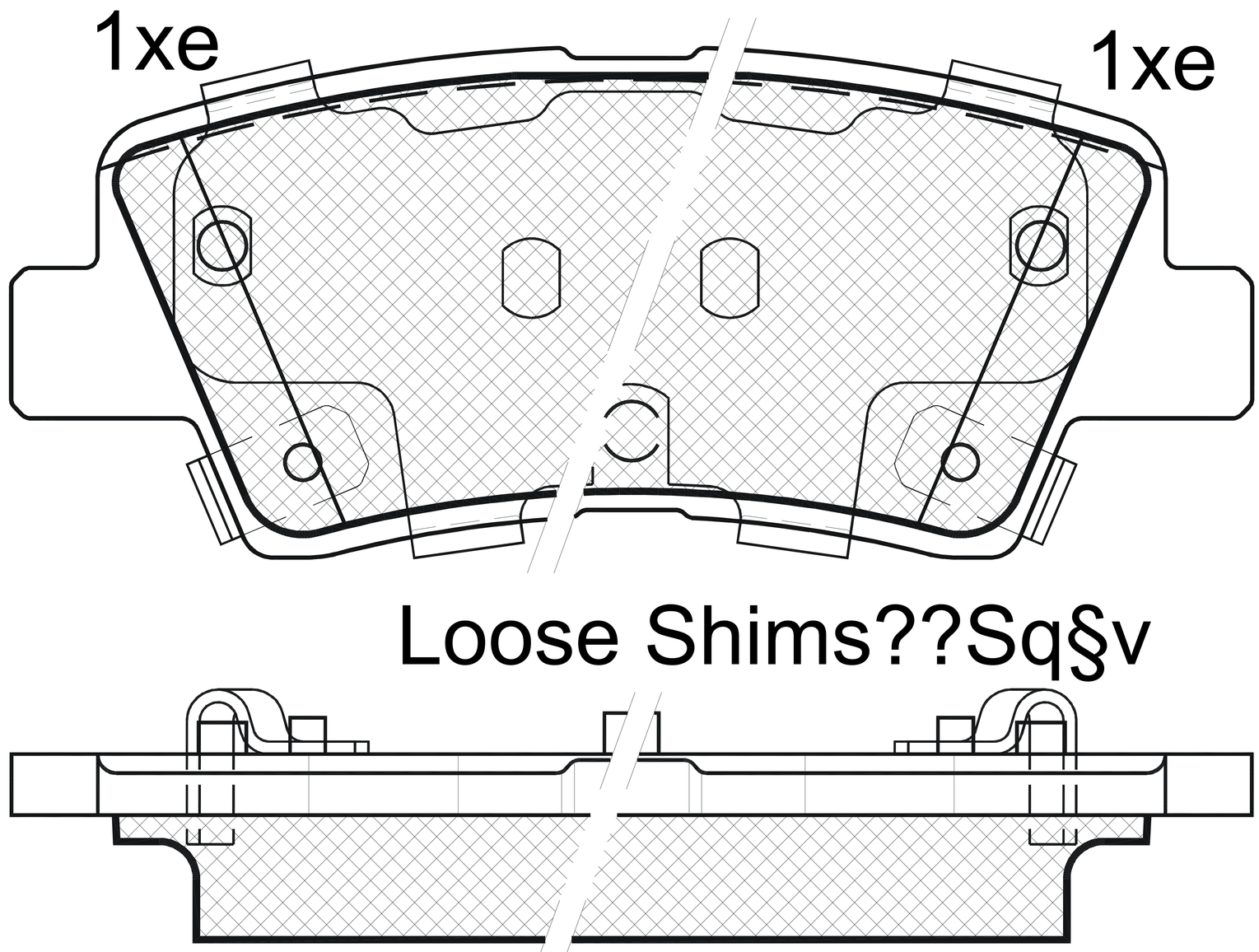

Loose Shims??Sq§v

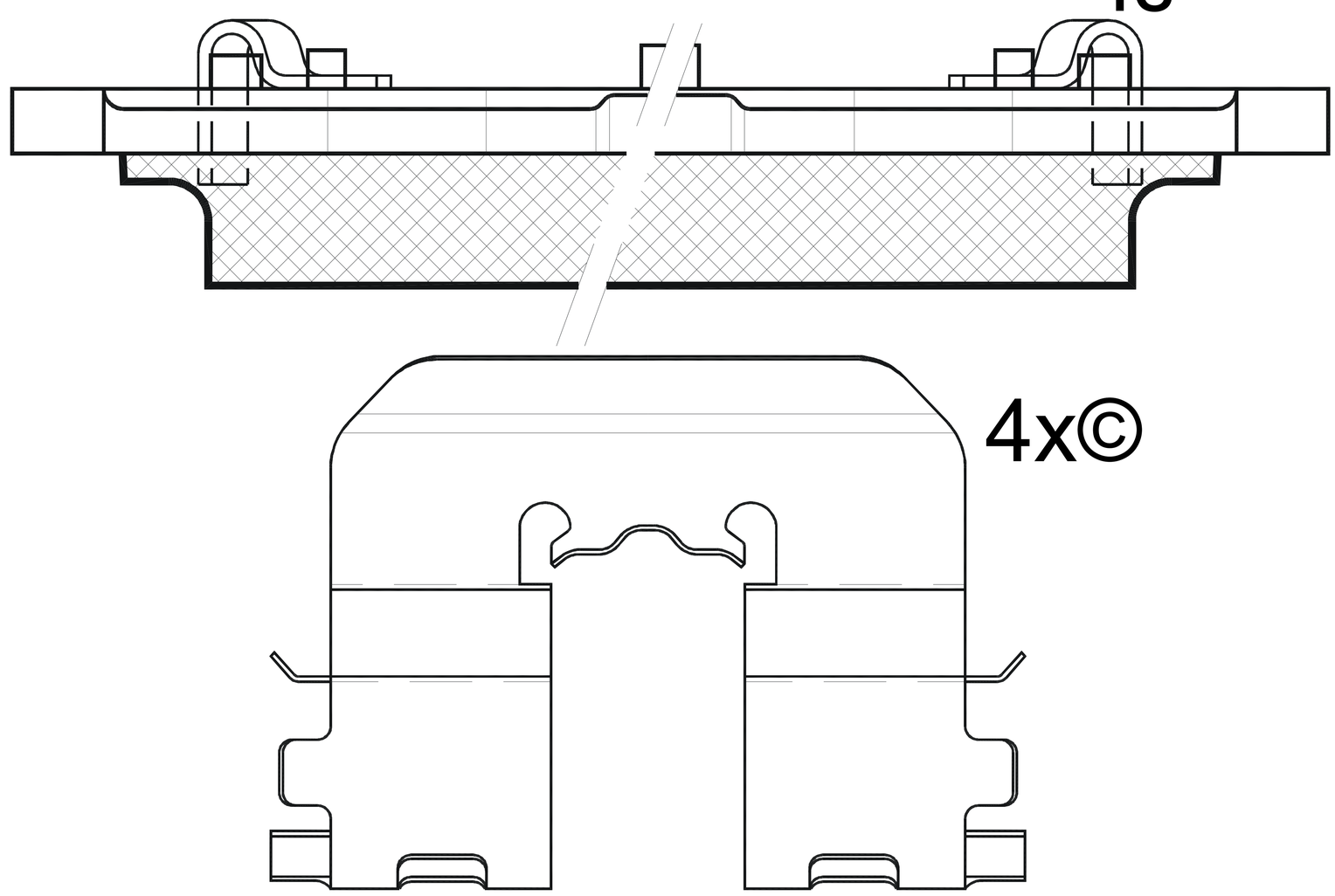

1-Ref. 690274 E©o????n