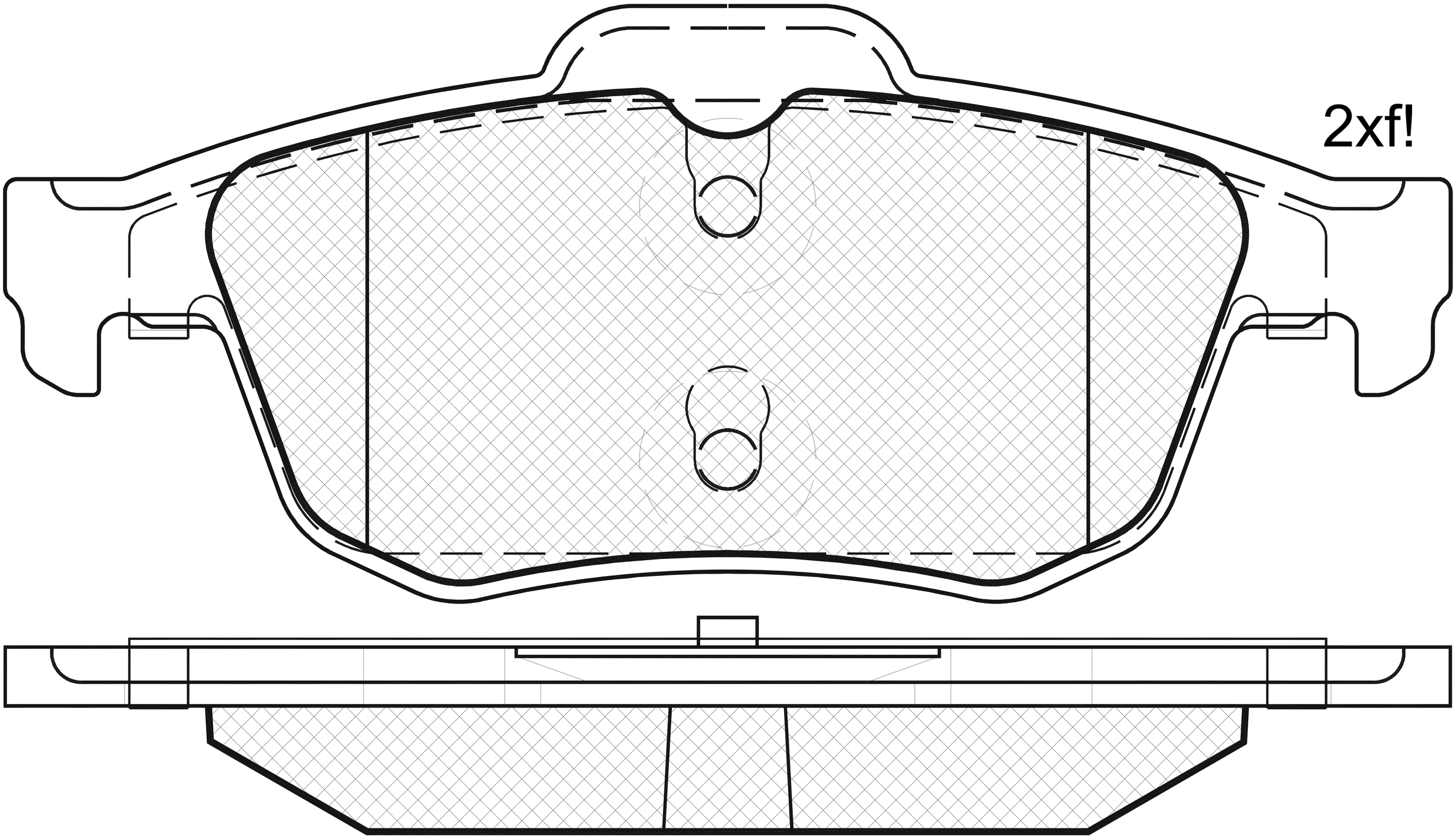
2xf!

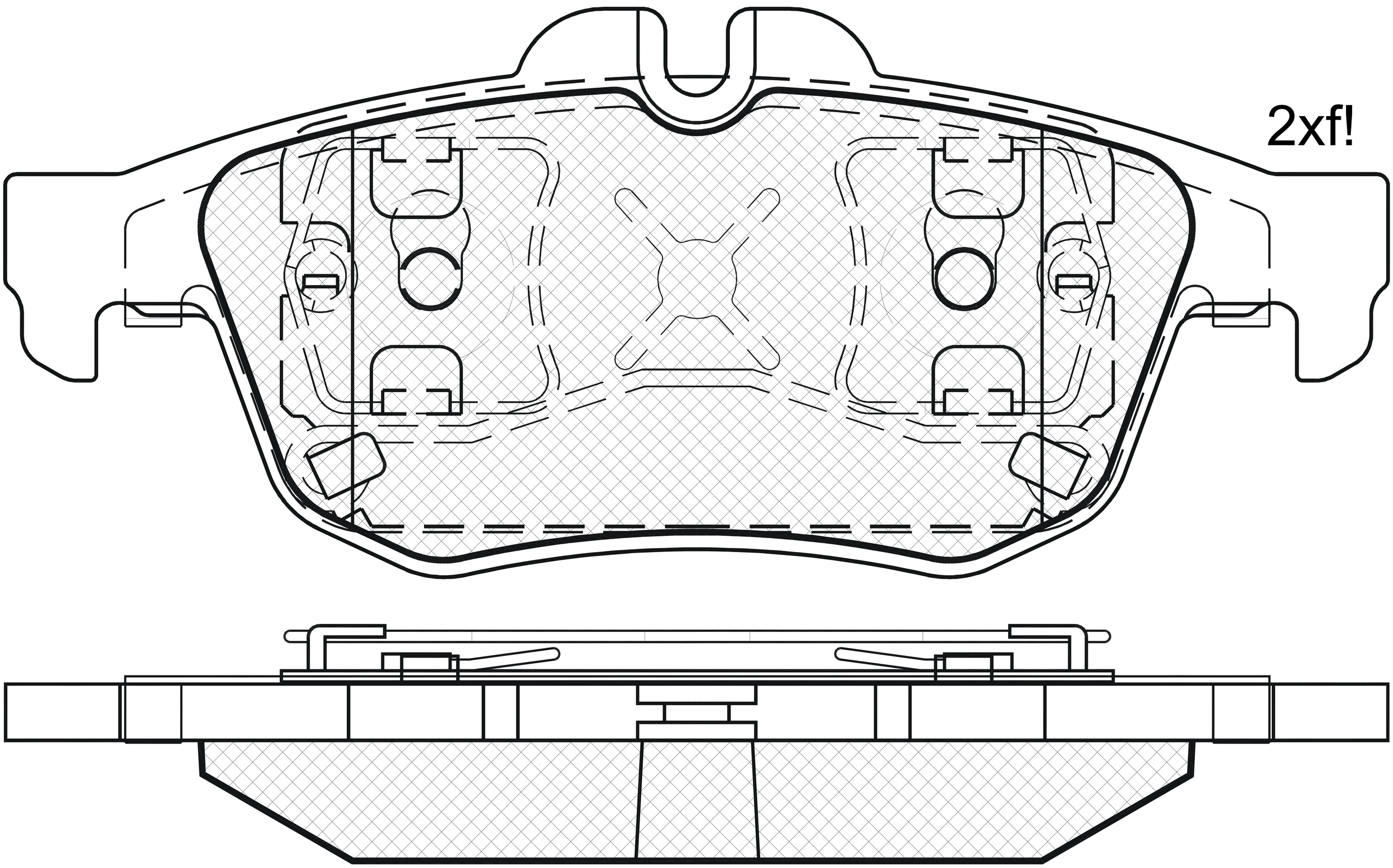
2xf!