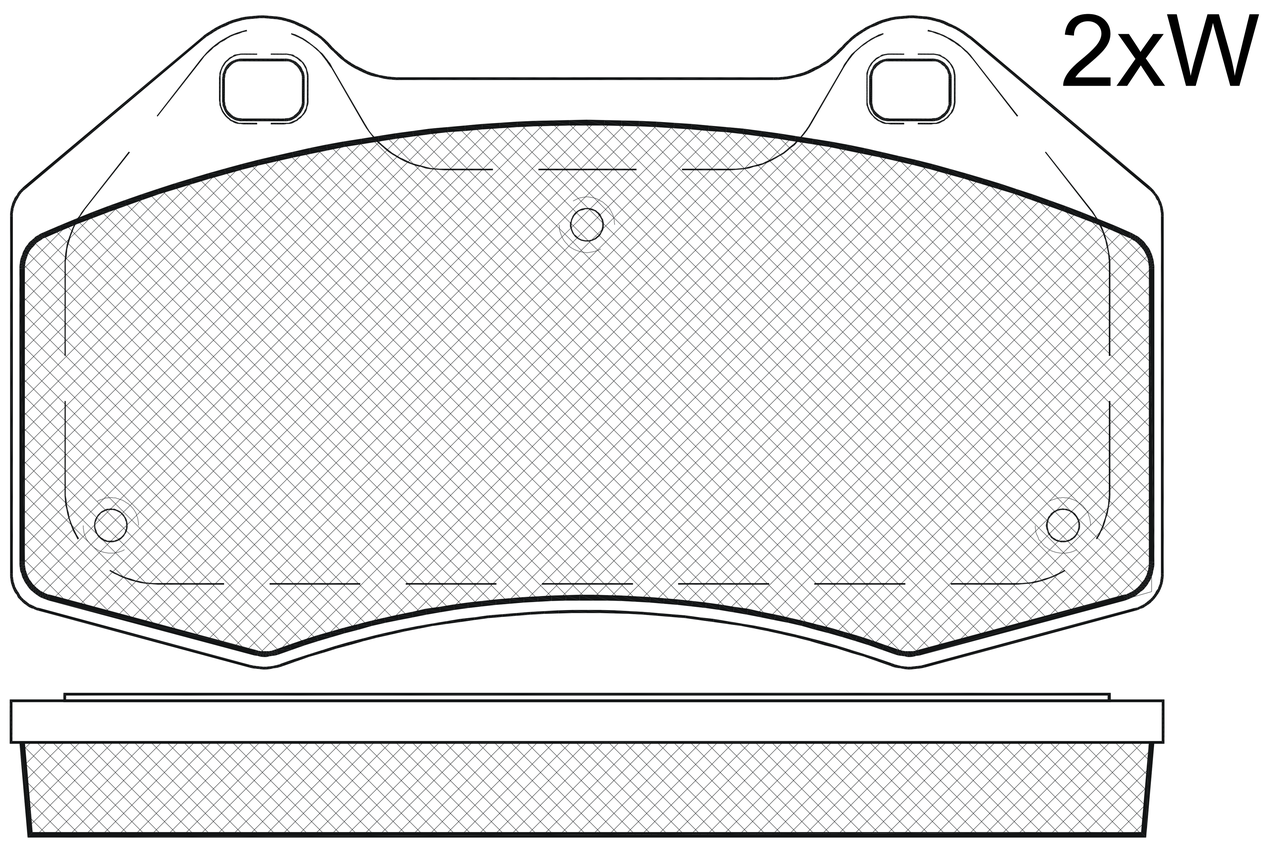
2xW

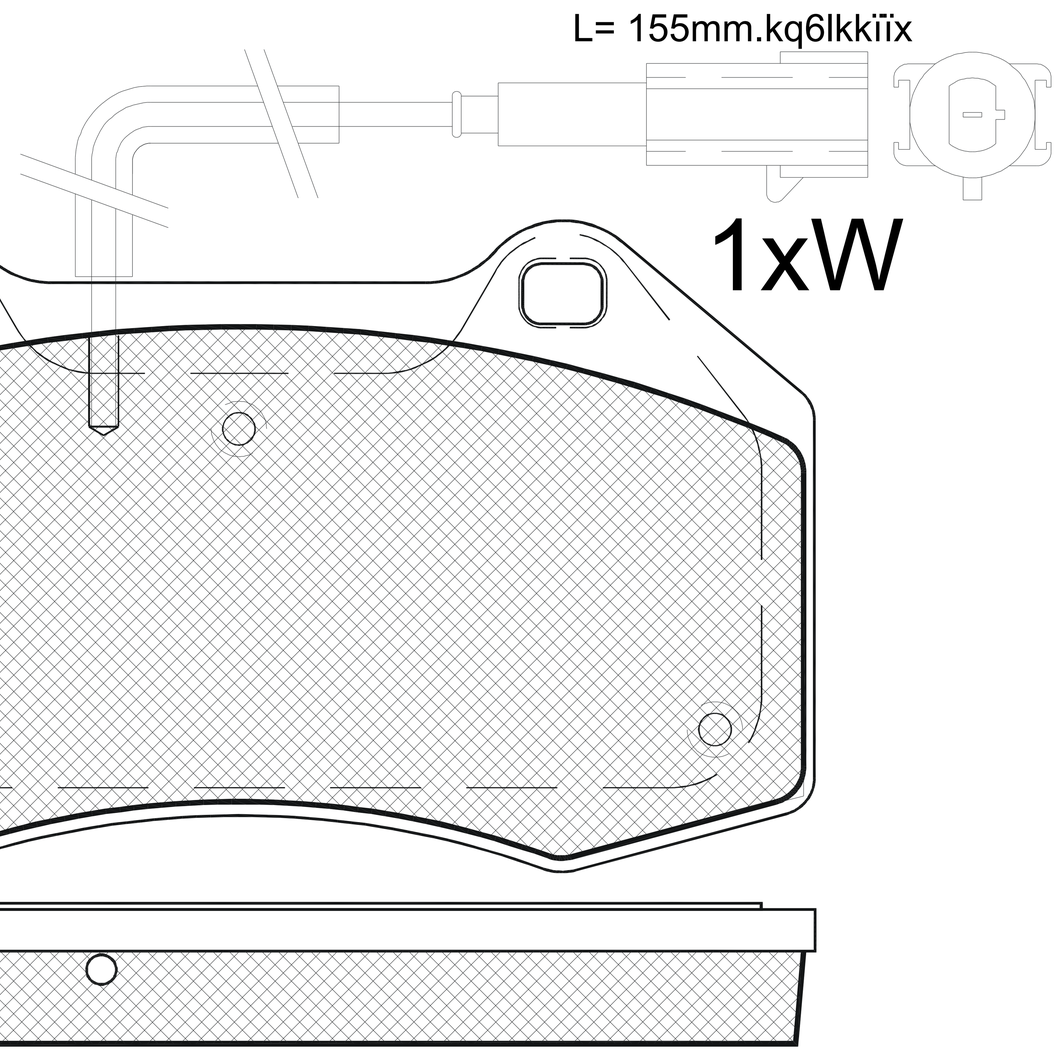
L= 155mm.kq6lkkïïx
1xW

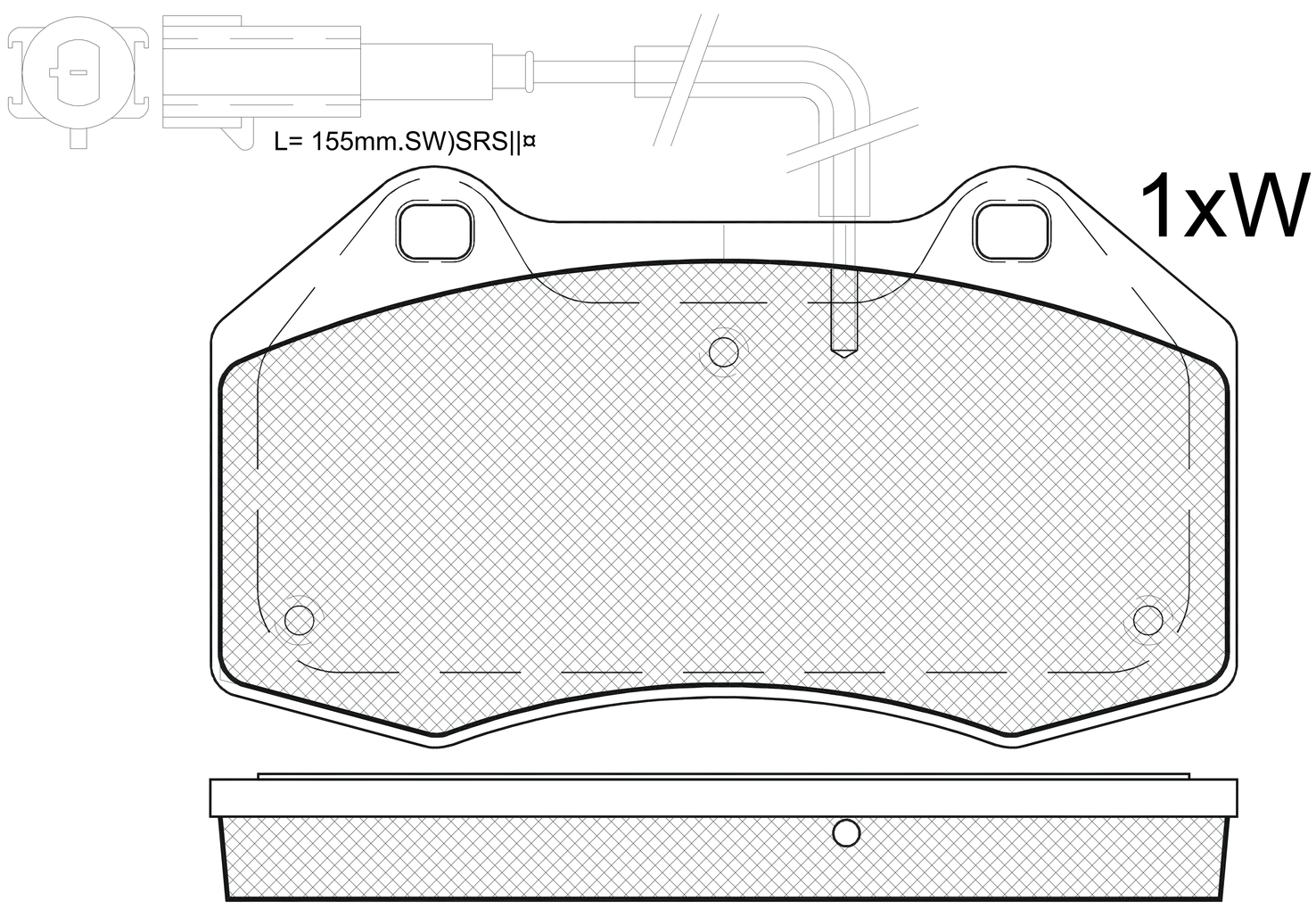
L= 155mm.SW)SRS||¤
1xW